used for: D-SUB HD

ⓑ STRIPPING DIMENSIONS

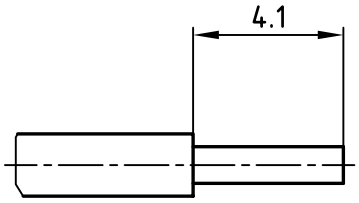

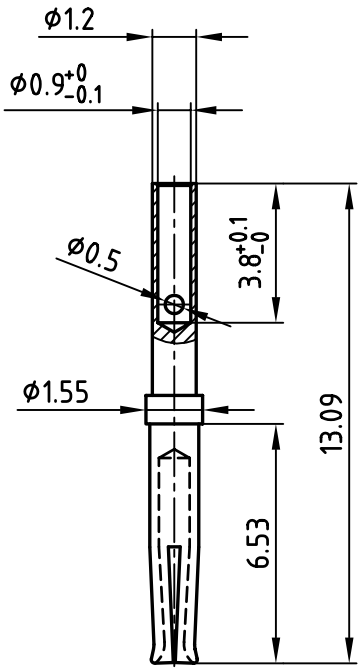

ⓑ NOTES:

1. CONTACTS: PHOSPHOR BRONCE
2. PLATING: 8µin HARD GOLD OVER min. 50µin NICKEL
3. CRIMPING: USE CRIMP TOOL 360X10329X
   WITH TOOL INSERT 360X10629X
   SELECTOR SETTINGS: 4 for AWG 22
   3 for AWG 24
   2 for AWG 26
   1 for AWG 28

Directive 2002/95/EC „RoHS“ Compliant

THIS DRAWING MAY NOT BE COPIED OR REPRODUCED IN ANY WAY, AND MAY NOT BE PASSED ON TO A THIRD PARTY WITHOUT WRITTEN PERMISSION. OWNERSHIP AND COPYRIGHT OF CONEC GmbH

DO NOT ALTER CAD DRAWING BY HAND

rev.	description	date	name
2 x b	Ä 2647	11.01.2007	Lehmen.
a	Origin		

tolerance ISO 2768-m

2001	date	name
drawn	12.03.	Parei
appd.	12.03.	E. Mickenbecker
norm		
d-old		

CONEC®

scale: 5:1

material: SEE NOTES

title: HD CRIMP SOCKET CONTACT

dwg no: 16K1A153A

AutoCAD 2000

DIN-A 4

sh: 1/1

part no: 162A18419X